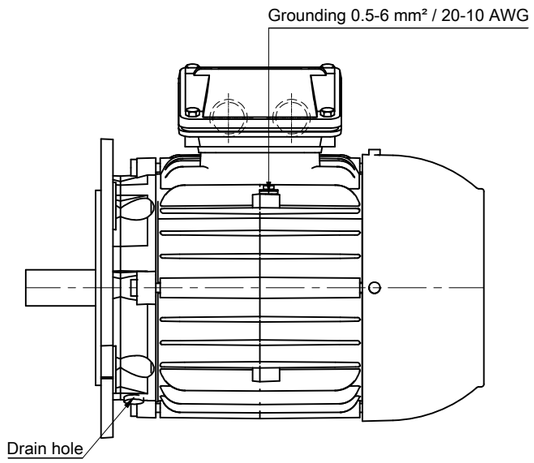

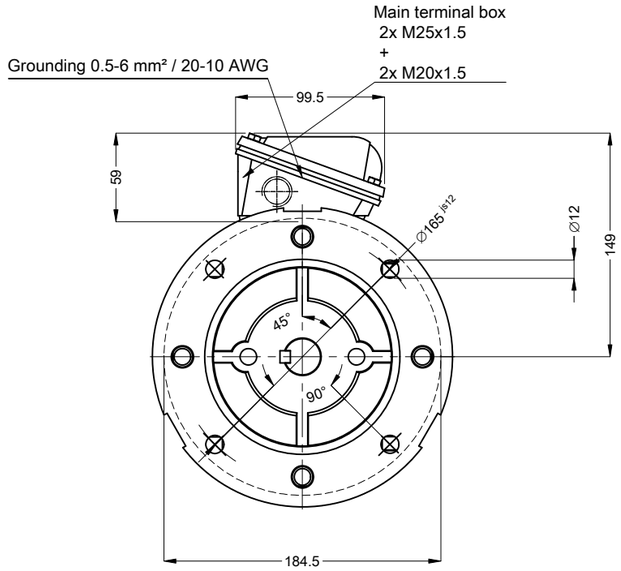

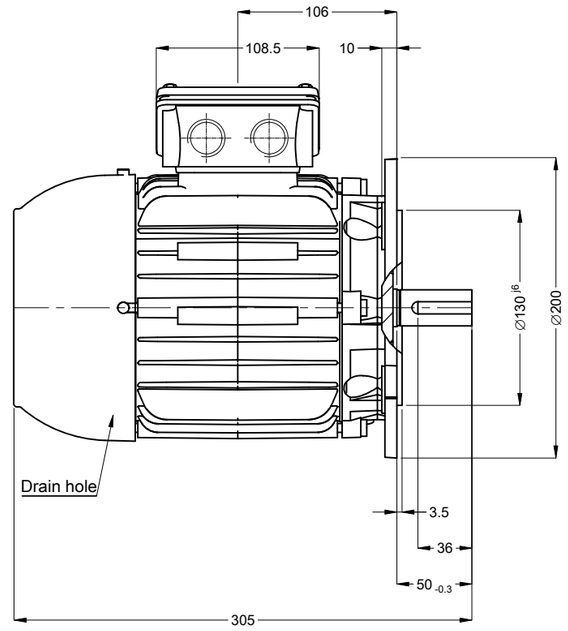

Double grounding
Bearing cap
Thermal protection to switch off - thermistors 155°C
Space heaters 110 to 127 V
Color RAL 5009
Painting plan 202P
Mounting B5T

DE Shaft End

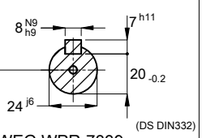

DM8 WEG WPR-7339

1.1 kW 04 Poles 50 Hz | A

Scale 1 : 4

ECM	LOC	SUMMARY OF MODIFICATIONS	EXECUTED	CHECKED	RELEASED	DATE	VER
			HYBRISUSER				00

EXECUTED	HYBRISUSER
CHECKED	
RELEASED	
REL. DATE	

THREE PH. MOTOR W22 IE3
FRAME 90S IP55 TEFC

PREVIEW
WDD 00
SHEET 1 / 1

Dimensions in mm

A3

WEG's property. Forbidden reproduction without previous authorization.