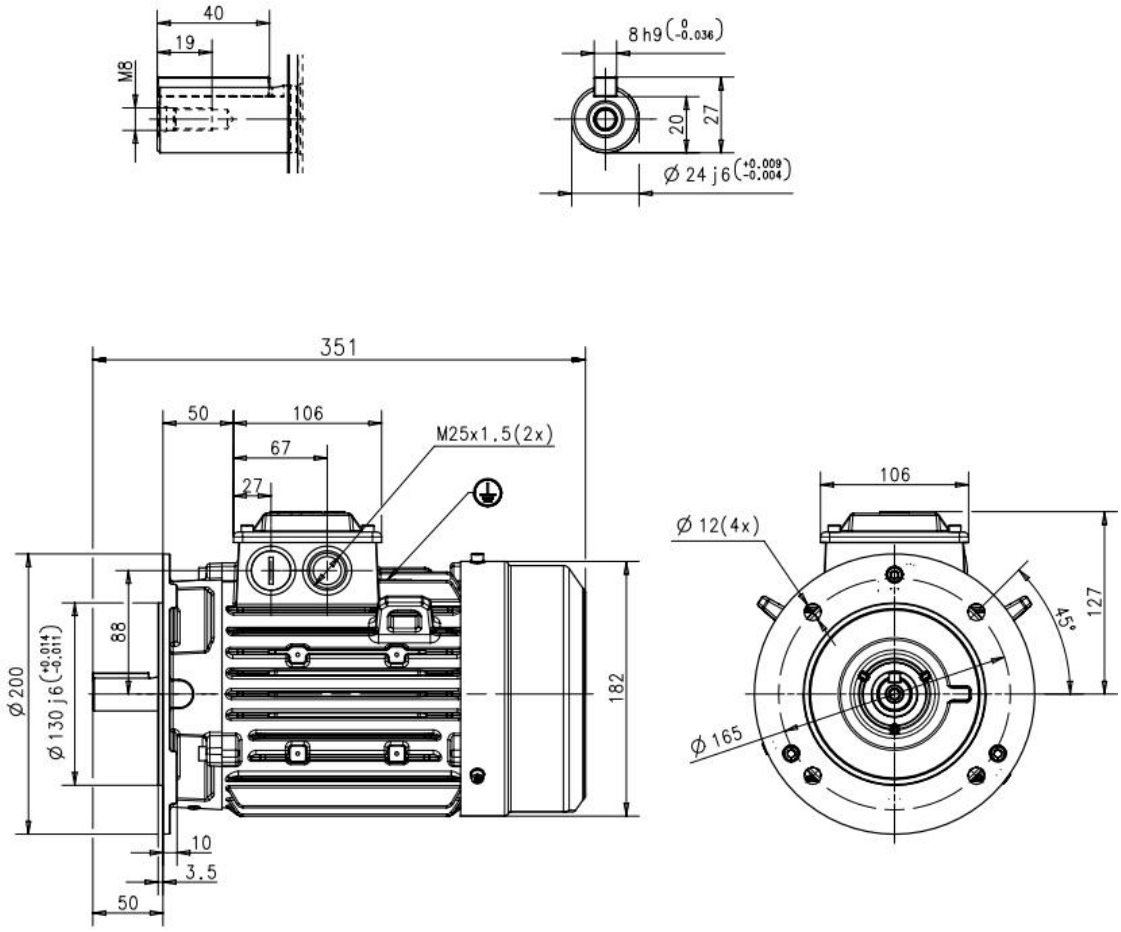


Additional information:

| | | |
|---|---|---|
| **Dimension Print** | Motor Type: IE3M2BAX 90SL_2-6 B5, V1, V3 | Document No: 3GZC500009-85 A<br>13 BA 90 A |
| Description: STANDARD SQUIRREL CAGE MOTOR | | |

| | | | | |
|---|---|---|---|---|
| Unit: | ABB Motors and Generators | Issued by: | Jeff Wang | Replaces: |
| Date: | 2016-01-22 | Approved by: | Adam zhu | Replaced by: |

| | | |
|---|---|---|
| **ABB Ltd.** | Customer Reference: | ABB |